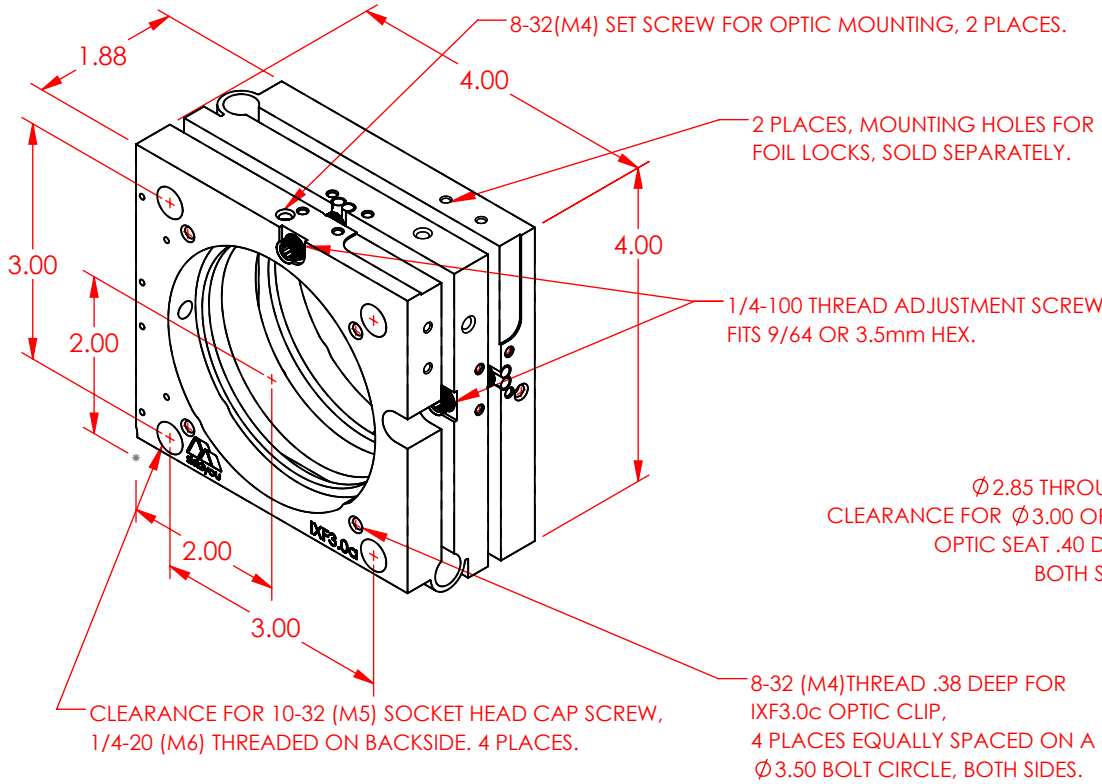

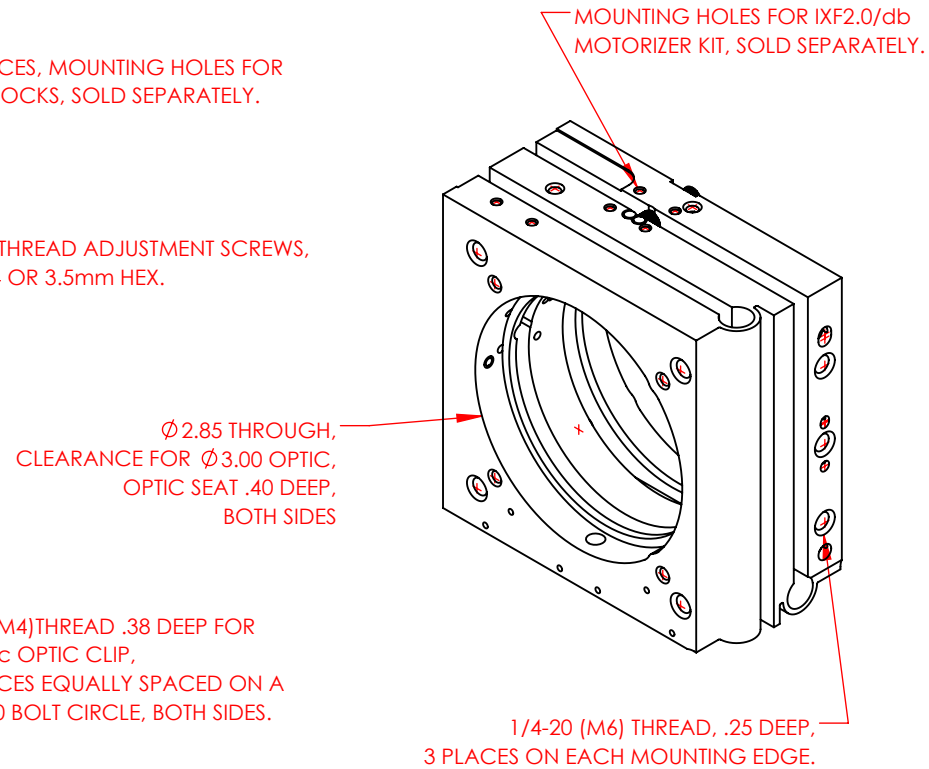

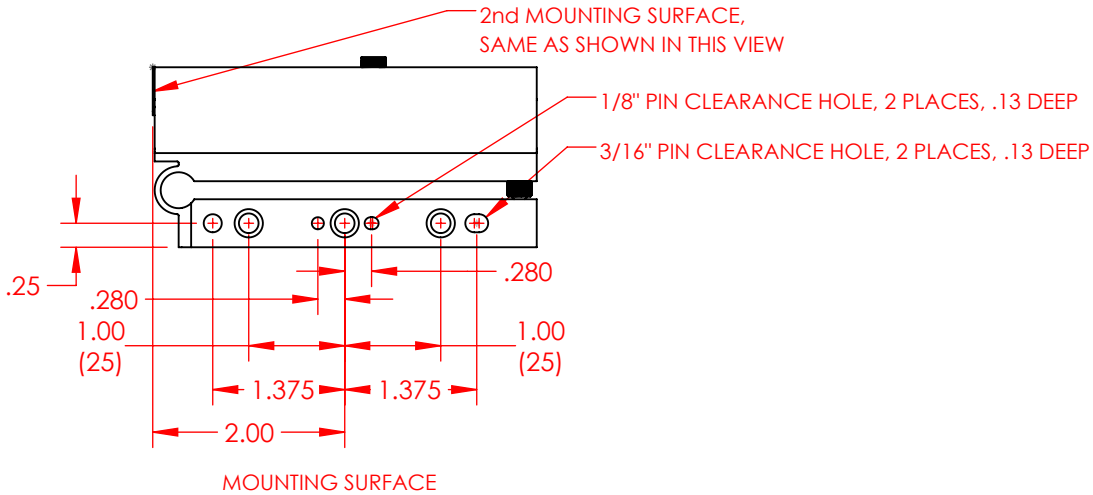

DIMENSIONS IN PARENTHESES REFLECT
METRIC ASSEMBLY FEATURES