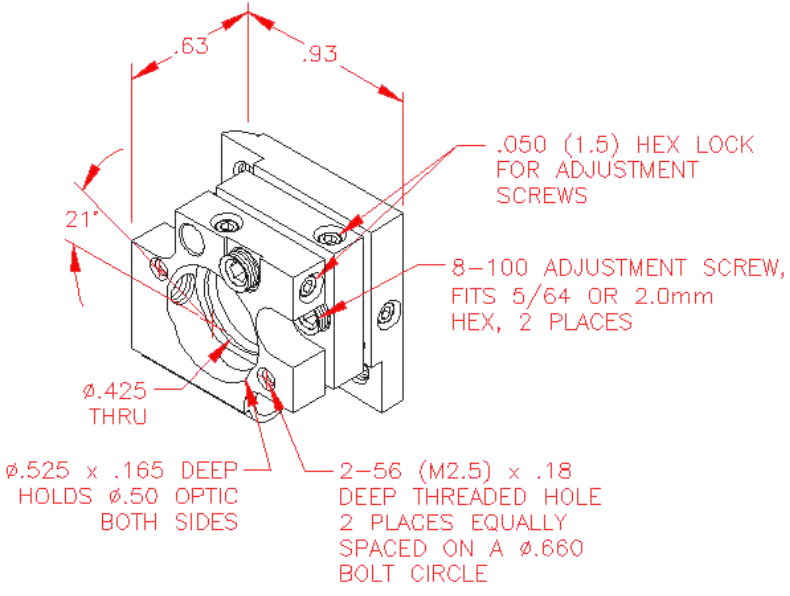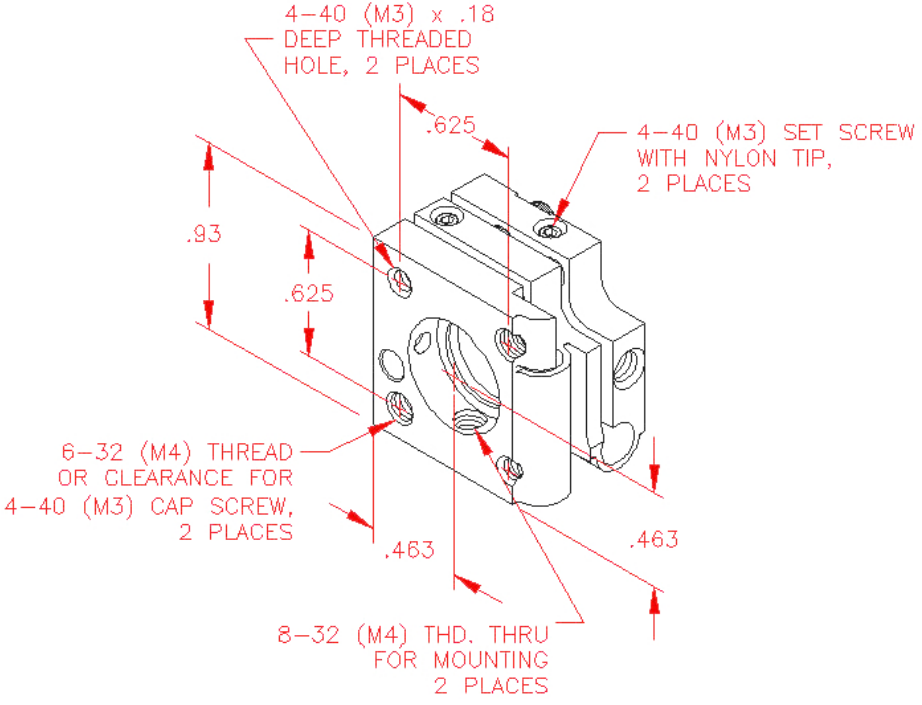DIMENSIONS IN PARENTHESES
REFLECT METRIC ASSEMBLY
FEATURES