SPECIFICATIONS

Model Number: MT48B3
Part Number: 19031841A August 22, 2005

Mechanical Drawing:

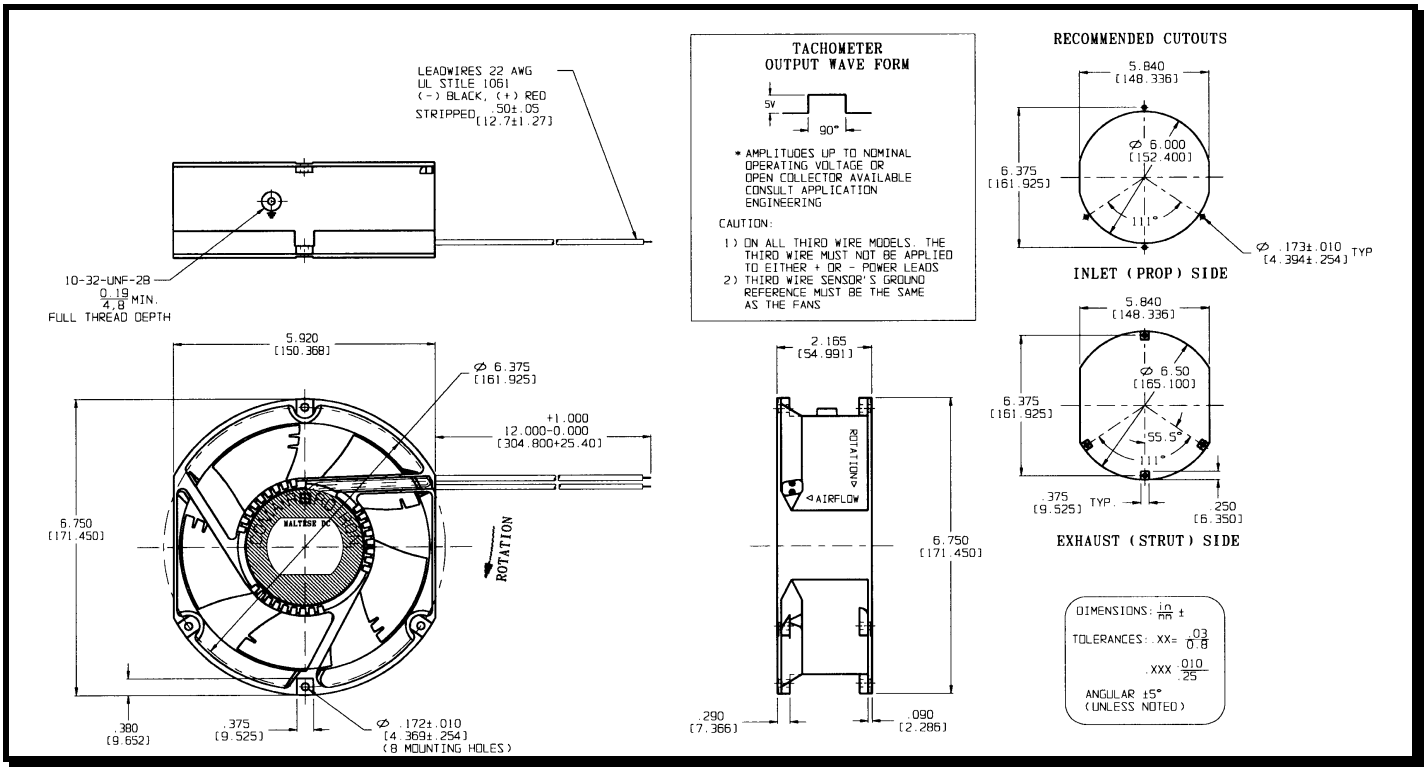

Motor:

Nominal Voltage	= 48 vdc
Operating Voltage Range	= 24 - 56 vdc
Nominal Running Current	= 0.720 amps
Max. Locked Rotor Current	= 1.30 amps
Running Power	= 34.0 watts
Average Speed	= 3400 RPM
Bearings	= Ball
Air Flow	= 300 CFM
Acoustic	= 57.1 dBA

Construction:
Venturi: Single Piece Die-cast Aluminum, Black.
Propeller: Plastic, Black, UL 94V-0

Life Expectancy:
This fan is designed for continuous duty life of 76,000 hours at 40°C.

Additional Features:
Brushless DC Motor
Locked Rotor Protection
Reverse Polarity Protected
Automatic Restart Capability

Operating Temperature:	-10°C to 70°C
Storage Temperature:	-40°C to 85°C

Termination:
12" Lead wires, 22 AWG, UL 1061
Red = Power (+)
Black = Return (-)

Agency Approvals:
cURus, CE