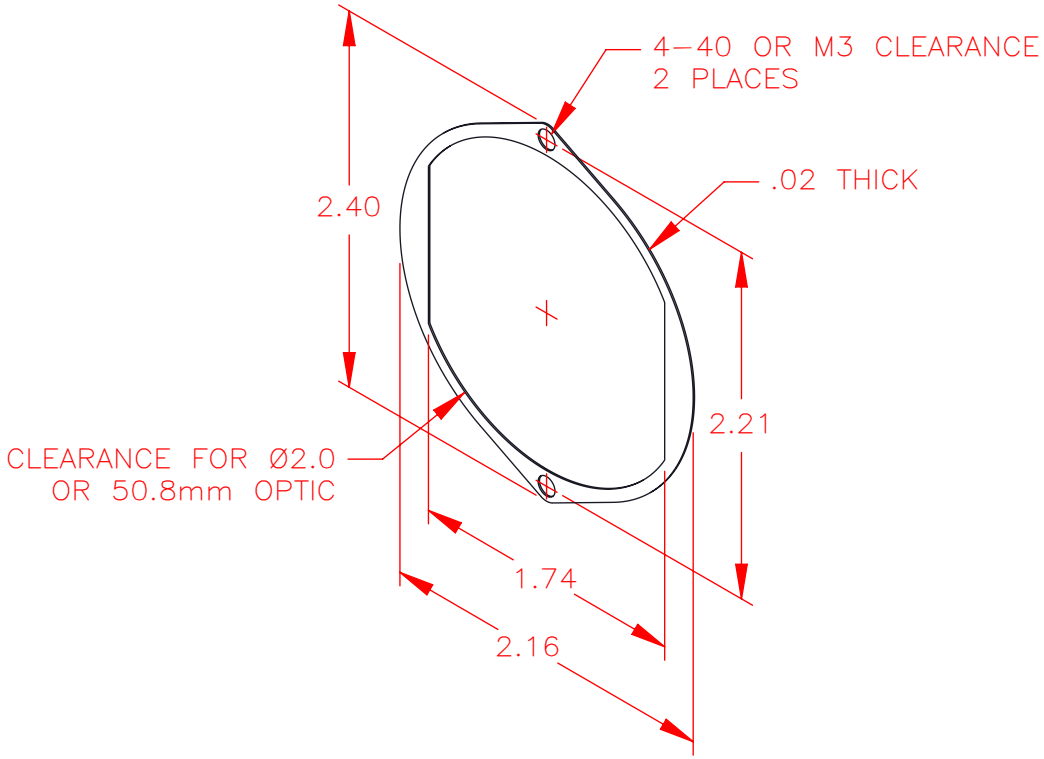PATENT # 9784939