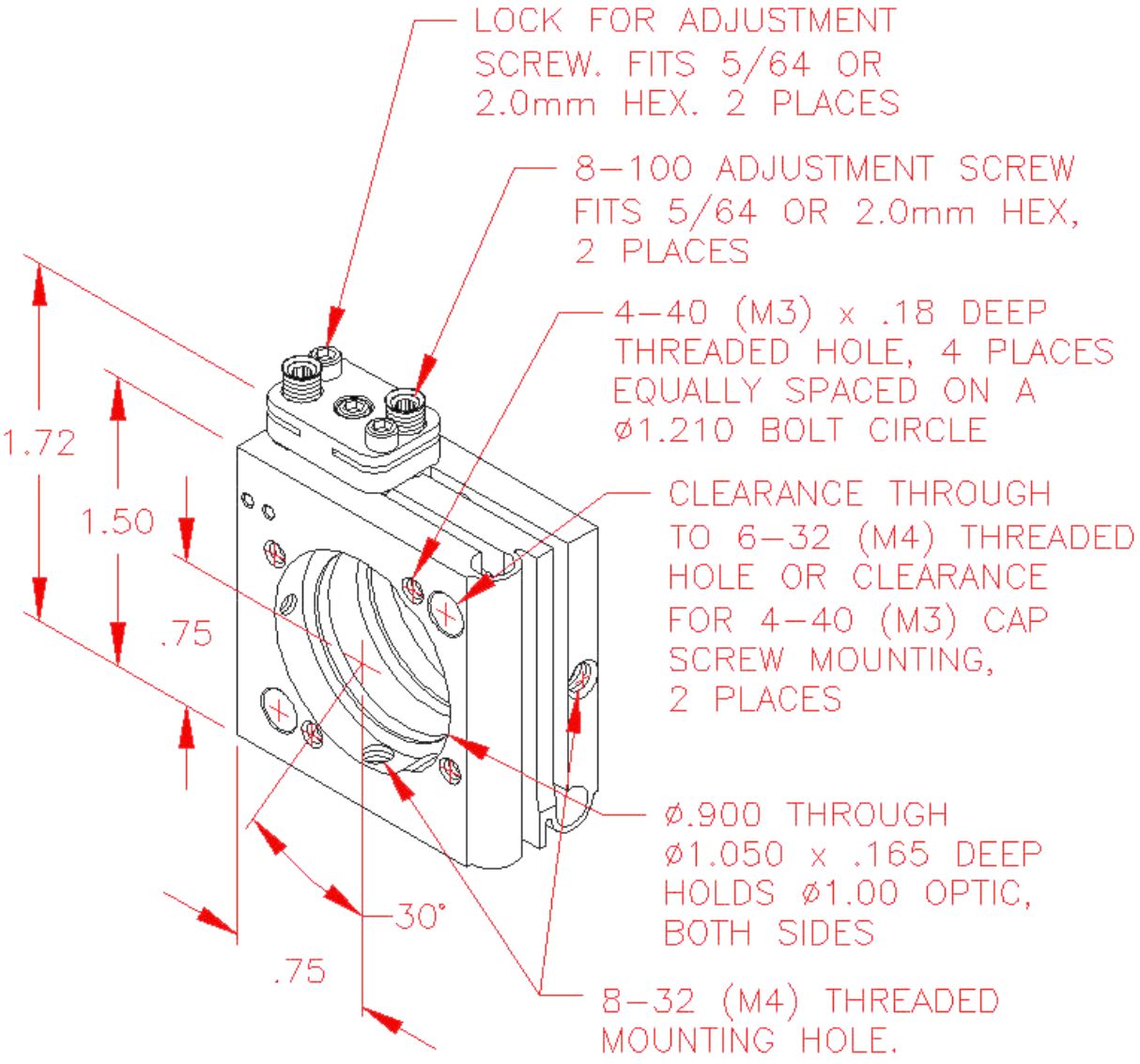

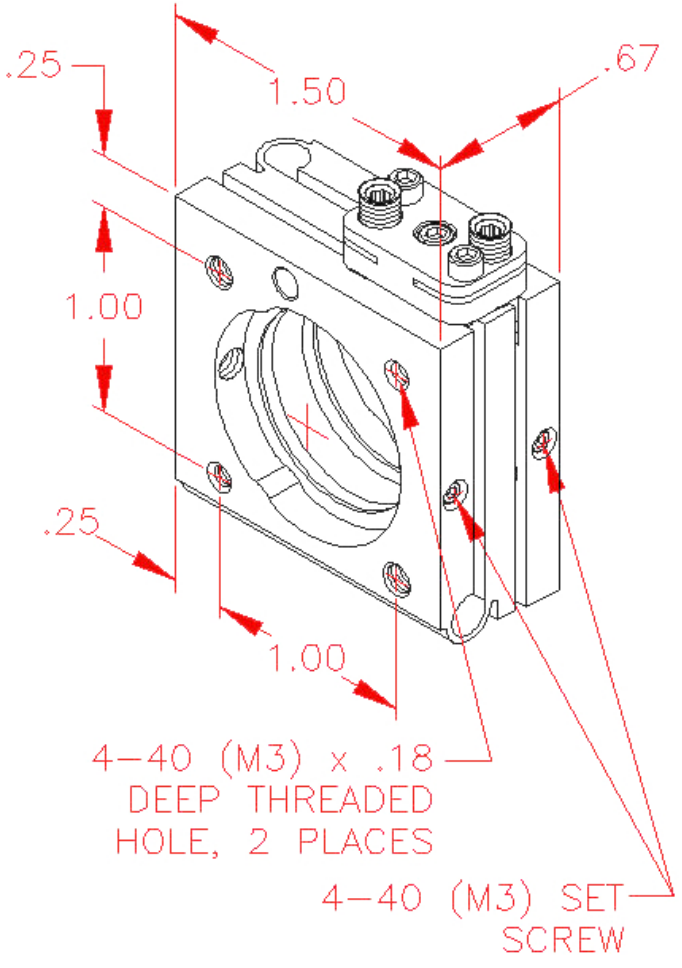

DIMENSIONS IN PARENTHESES REFLECT METRIC ASSEMBLY FEATURES