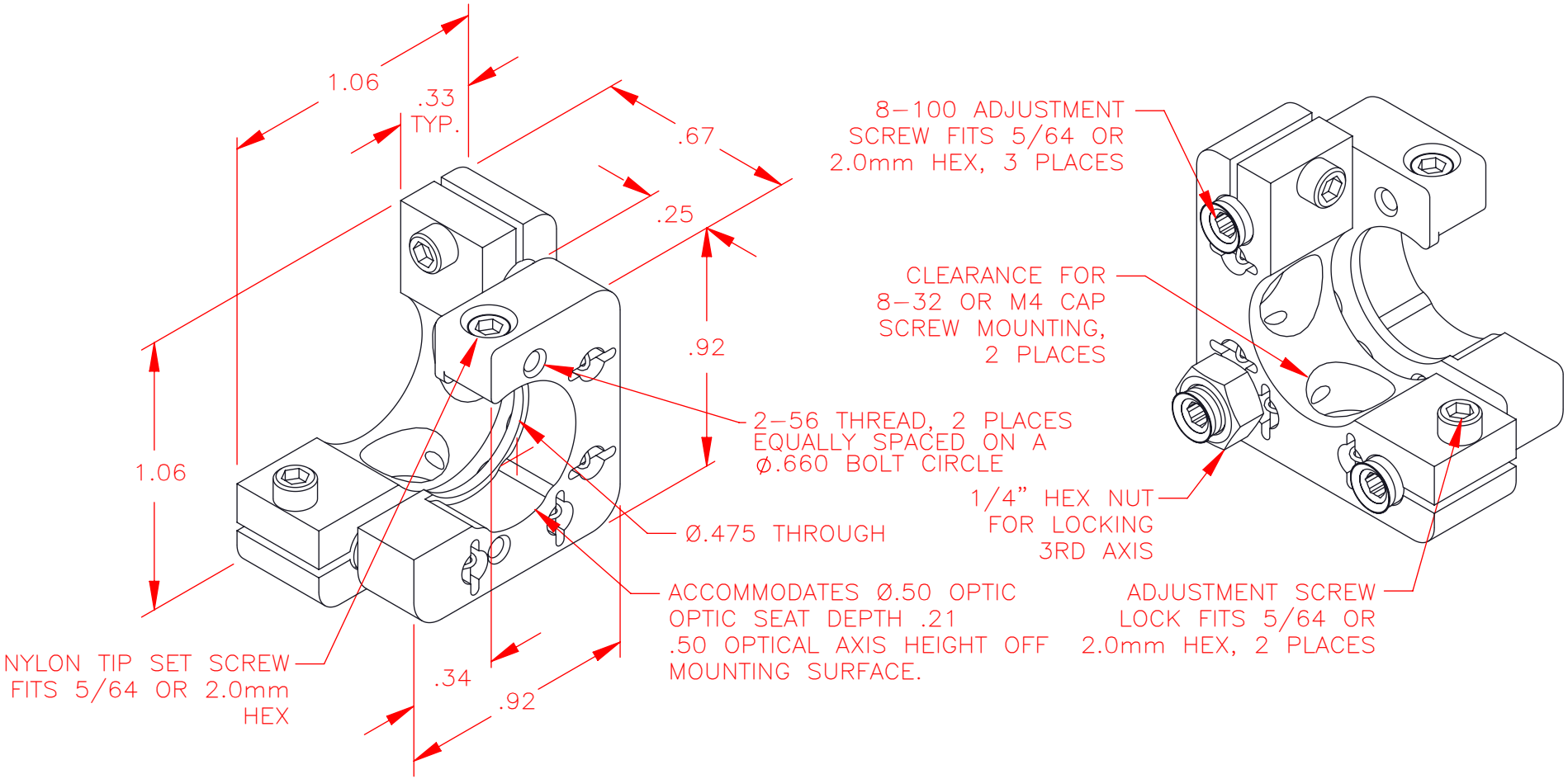
1.06
.33
TYP.
.67
.25
.92
1.06
8–100 ADJUSTMENT
SCREW FITS 5/64 OR
2.0mm HEX, 3 PLACES
CLEARANCE FOR
8–32 OR M4 CAP
SCREW MOUNTING,
2 PLACES
2–56 THREAD, 2 PLACES
EQUALLY SPACED ON A
ø.660 BOLT CIRCLE
1/4" HEX NUT
FOR LOCKING
3RD AXIS
Ø.475 THROUGH
ACCOMMODATES Ø.50 OPTIC
OPTIC SEAT DEPTH .21
.50 OPTICAL AXIS HEIGHT OFF
MOUNTING SURFACE.
ADJUSTMENT SCREW
LOCK FITS 5/64 OR
2.0mm HEX, 2 PLACES
NYLON TIP SET SCREW
FITS 5/64 OR 2.0mm
HEX
.34
.92