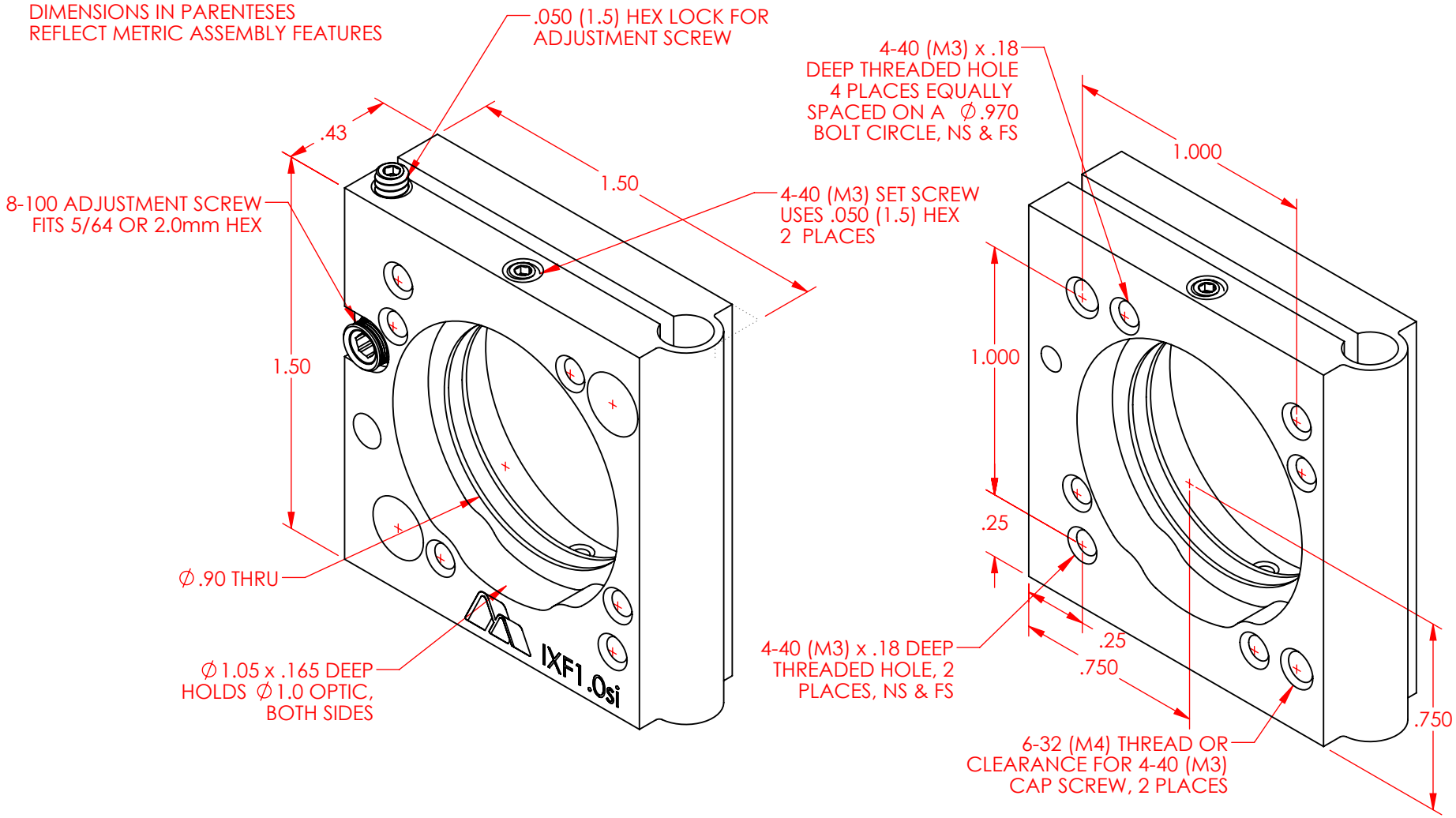
DIMENSIONS IN PARENTESES
REFLECT METRIC ASSEMBLY FEATURES
.050 (1.5) HEX LOCK FOR
ADJUSTMENT SCREW
.43
1.50
8-100 ADJUSTMENT SCREW
FITS 5/64 OR 2.0mm HEX
4-40 (M3) SET SCREW
USES .050 (1.5) HEX
2 PLACES
1.50
∅.90 THRU
∅1.05 x .165 DEEP
HOLDS ∅1.0 OPTIC,
BOTH SIDES
IXF1.0si
4-40 (M3) x .18
DEEP THREADED HOLE
4 PLACES EQUALLY
SPACED ON A ∅.970
BOLT CIRCLE, NS & FS
1.000
1.000
.25
4-40 (M3) x .18 DEEP
THREADED HOLE, 2
PLACES, NS & FS
.25
.750
.750
6-32 (M4) THREAD OR
CLEARANCE FOR 4-40 (M3)
CAP SCREW, 2 PLACES